EN

SPINO EI

Robotic Pool Cleaner

USER MANUAL

Original Instructions Version 3.0

03/2026

This manual is copyrighted by Mammotion company. Without the written permission of the company, any unit or individual shall not copy, modify, reproduce, transcribe or transmit in any way or for any reason. This manual is subject to change without notice at any time.

Unless explicitly agreed otherwise, this manual serves solely as a usage guide, and all statements and information contained herein do not constitute any form of warranty.

Intended Use

Mammotion robots are designed for residential pool cleaning and are not intended for commercial use.

Revision Log

Date	Version	Description
05/2025	V1.0	Initial version
08/2025	V2.0	1. Updated the structure 2. Updated the Chapter 4 3. Updated technical specifications
03/2026	V3.0	1. Updated structure 2. Updated LED codes 3. Updated Floor Mode 4. Update App UI 5. Updated Turbo Cleaning

CONTENTS

1 Safety Instructions ..... - 1 -

1.1 General Safety ..... - 1 -

1.2 Battery Safety ..... - 2 -

2 Introduction ..... - 3 -

2.1 Product Overview ..... - 3 -

2.2 LED Codes ..... - 3 -

3 Operation ..... - 6 -

3.1 Charge ..... - 6 -

3.2 Clean the Pool ..... - 7 -

3.3 After Use ..... - 9 -

4 Downloading Mammotion App ..... - 12 -

4.1 Setting Up Your Robot ..... - 13 -

4.2 Upload Logs ..... - 14 -

4.3 Update Firmware ..... - 15 -

4.4 Beta Features ..... - 16 -

5 Maintenance ..... - 17 -

5.1 Clean the Robot ..... - 17 -

5.2 Routine Inspection ..... - 17 -

5.3 Storage ..... - 18 -

5.4 Replaceable Accessories ..... - 18 -

6 Disposal ..... - 20 -

7 Product Specifications ..... - 21 -

8 Warranty ..... **- 23 -**

9 Compliance ..... **- 26 -**

10 Simplified EU Declaration of Conformity ..... **- 28 -**

11 Contact Us ..... **- 29 -**

1 Safety Instructions

1.1 General Safety

READ AND FOLLOW ALL INSTRUCTIONS

1. Carefully read and fully understand the instructions before operating the robot.
2. Keep the robot out of reach of children and those with reduced physical, sensory, or mental capabilities unless properly supervised. Do not allow anyone in the pool while the robot is operating, or allow children to place it into or remove it from the pool.
3. Children must not play with the robot.
4. Cleaning and user maintenance shall not be made by children without supervision.
5. Ensure that children do not attempt to access the robot while it is operating.
6. Only use the robot and accessories recommended by Mammotion. Using unauthorized items may result in incorrect operation or damage.
7. This robot must only be supplied at SELV.
8. Ensure the robot is turned off and the charger is unplugged before performing any maintenance.
9. Pollution of the liquid could occur due to leakage of lubricants.
10. Use the robot for regular pool cleaning. If the pool hasn't been cleaned for an extended period, manually remove large debris before using the robot.
11. Do not strike, throw, or mishandle the robot to avoid damage or injury.
12. The charger must be connected only to a supply circuit that is protected by a ground-fault circuit-interrupter (GFCI). This GFCI should be tested on a routine basis. To test the GFCI, push the test button. The GFCI should interrupt power. Push the reset button. Power should be restored. If the GFCI fails to operate in this manner, the GFCI is defective. If the GFCI interrupts power to the charger without the test button being pushed, a ground current may be flowing, indicating the possibility of an electric shock. Do not use the charger. Disconnect the charger and contact the manufacturer for assistance.

13. Warning: Use only with TS-A081-2703003 charger.

1.2 Battery Safety

Lithium-ion batteries can explode or cause a fire if disassembled, short-circuited, exposed to water, fire, or high temperatures. Handle them with care, do not dismantle or open the battery, and avoid any form of electrical/mechanical abuse. Store them away from direct sunlight.

1. For the purposes of recharging the battery, only use the charger provided with this robot, and operate this charger at least 3.5 m (11.5 ft) from the edge of the pool.

2. DO NOT ATTEMPT TO REPAIR OR MODIFY BATTERIES! Repair attempts may result in severe personal injury, due to explosion or electrical shock. If a leak develops, released electrolytes are corrosive and toxic.

3. This robot contains batteries that are only replaceable by authorized persons.

SAVE THESE INSTRUCTIONS

2 Introduction

2.1 Product Overview

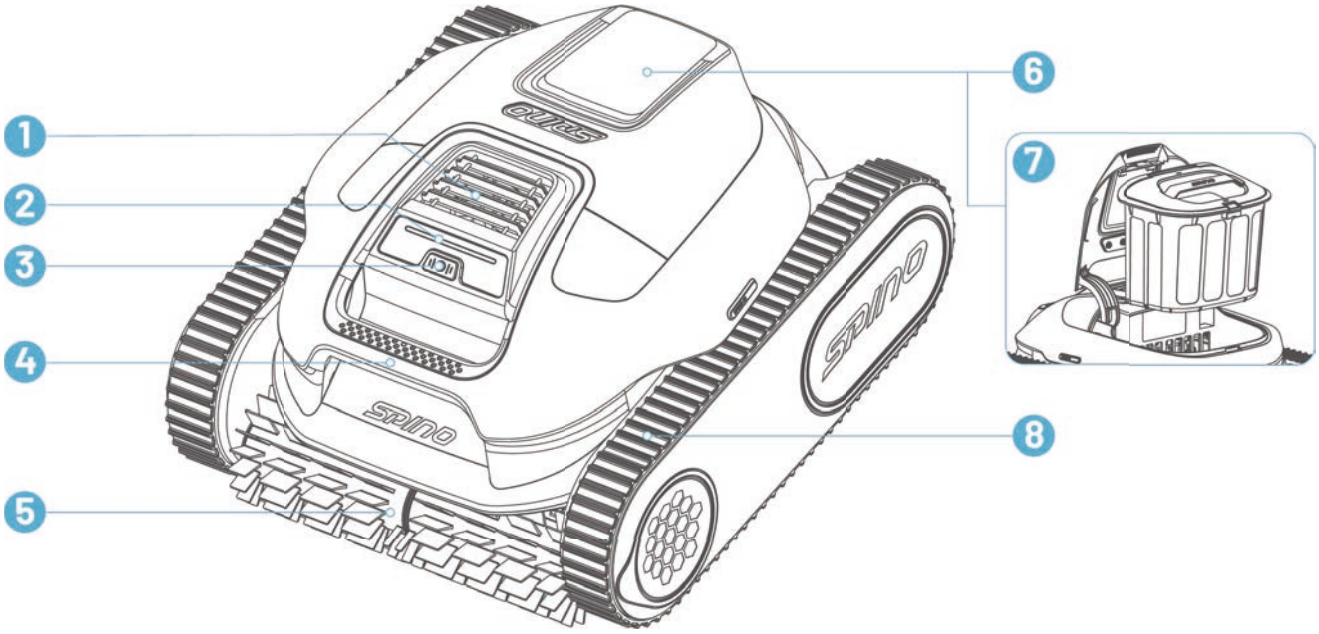

1. Water Outlet
2. LED
3. Power Button
4. Handle
5. Roller Brush
6. Filter Basket Cover
7. Filter Basket
8. Caterpillar Tread

2.2 LED Codes

When the robot is charging:

Color		Battery Level
	Solid Green	Battery=100%
	Pulsing Green	75%<Battery<100%
	Pulsing Blue	50%<Battery≤75%

	Pulsing Yellow	25%<Battery≤50%
	Pulsing Red	Battery≤25%

When the robot is off charge:

Color		Description
	Solid Green	75%<Battery≤100%
	Solid Blue	50%<Battery≤75%
	Solid Yellow	25%<Battery≤50%
	Solid Red	The robot stops cleaning and parks at waterline.
	Blinking Red	An error has occurred.
	Blinking Blue	The robot is updating.
	Blinking Yellow	The filter basket is not properly installed.

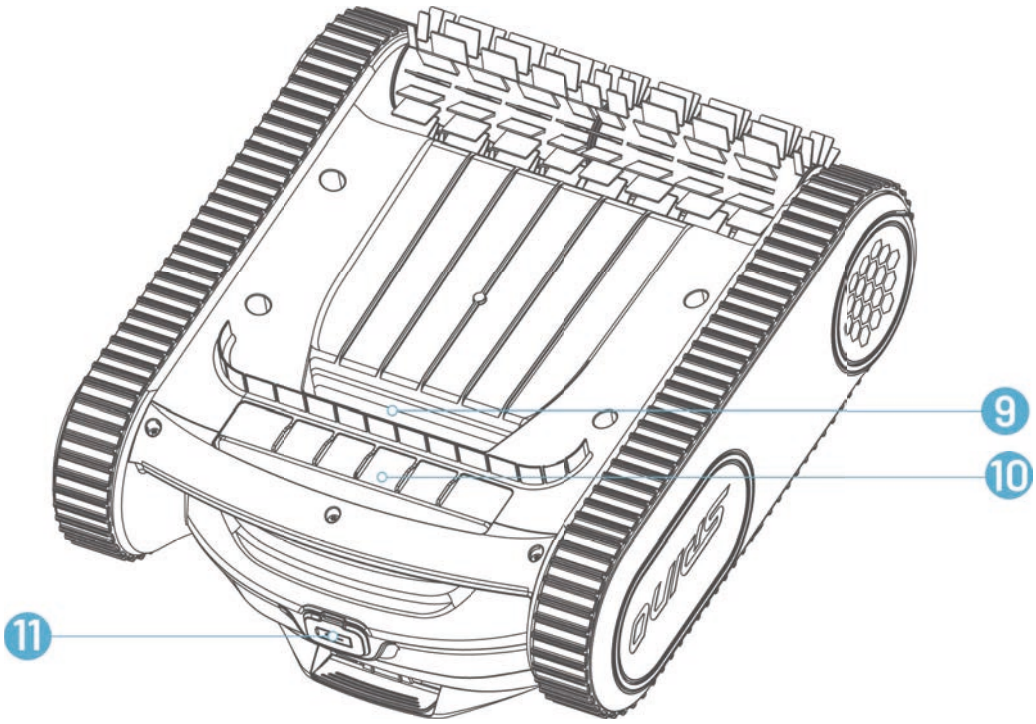

9. Water Inlet

10. Drain Outlet

11. Charging Port

3 Operation

3.1 Charge

WARNING

DO NOT charge the robot outdoors in rainy conditions.

Please follow these steps to charge your robot:

1. Remove the rubber plug.
2. Connect the charger to the charging port.
3. Plug the charger into a power socket.

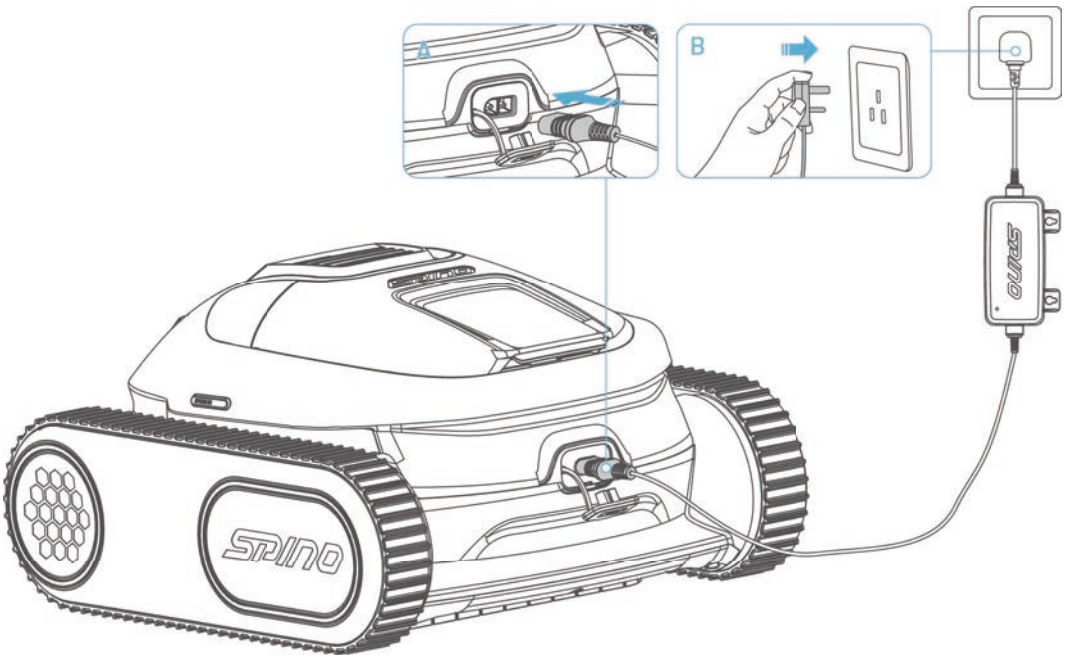

NOTE

- Charge the robot for initial use.
- Ensure the charging port and charger connector are as dry as possible before charging.
- For long-term storage, apply an anti-rust agent to the metal contacts of the charging port and connector.

3.2 Clean the Pool

WARNING

Do not allow children to operate the robot, including placing it into or removing it from the pool. Keep all persons out of the pool while the robot is in operation.

3.2.1 Preparation

1. Before cleaning, check whether the filter basket is attached properly.
2. Before cleaning, ensure there are no foreign objects such as towels or toys in the pool.
3. If the pool hasn't been cleaned for an extended period, manually remove large debris before using the robot.

NOTE

Do not take out the filter basket during cleaning.

3.2.2 Start Cleaning

1. Press and hold the Power button to turn on the robot.
2. Press the Power button briefly to select a cleaning mode.

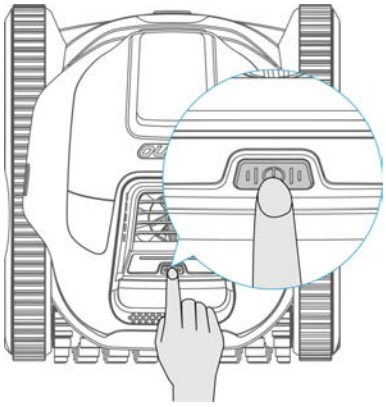

3. Place the robot into the water pool.

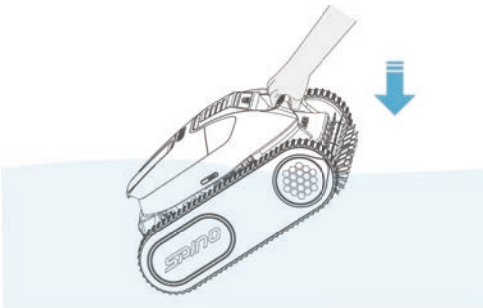

4. The robot will submerge to the pool floor and automatically start its cleaning cycle.

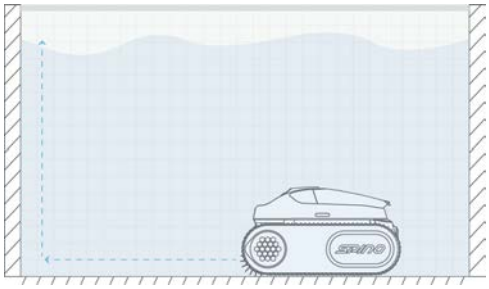

Cleaning modes:

ALL	In this mode, the robot will clean the floor, walls, and waterline. While cleaning the walls, the robot will return to the floor after completing each cleaning path, then move on to the next path.	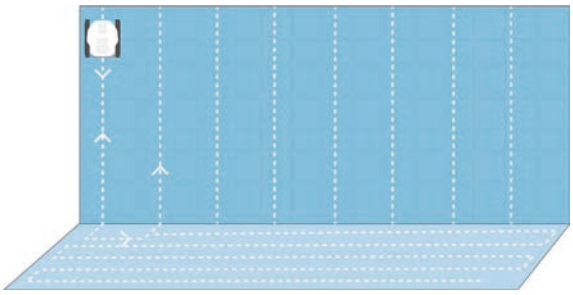
FLOOR	In this mode, the robot will clean the floor only.	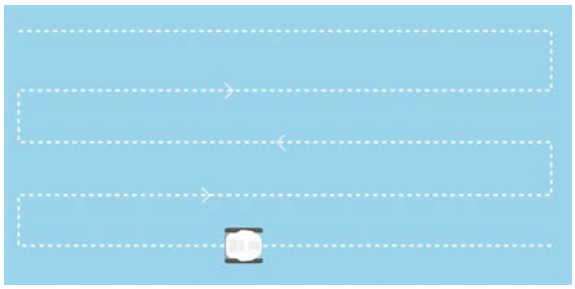

WALL	In this mode, the robot will clean the wall only. While cleaning, the robot will return to the floor after completing each cleaning path, then move on to the next path.	
ECO	In this mode, the robot will clean the pool floor for 50 minutes every other day.	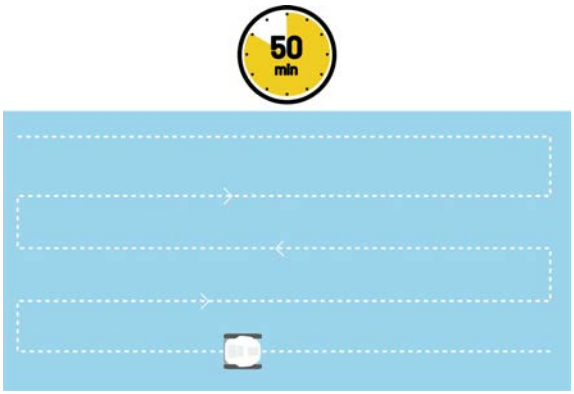

3.3 After Use

3.3.1 Exit Water

After the cleaning task is complete, the robot will park at the waterline for 15 minutes to allow for convenient retrieval.

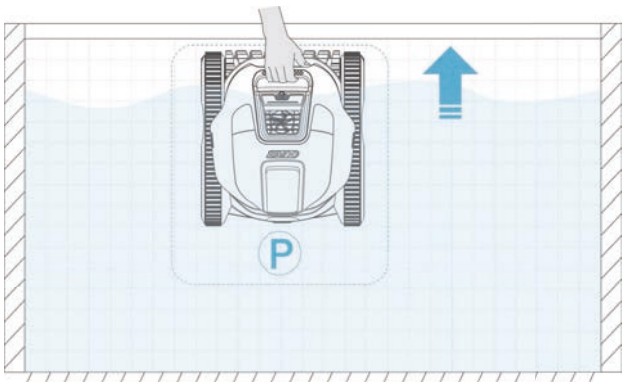

If the robot is not removed during this window, it will settle on the pool floor. To retrieve it, simply use a standard pool pole (not included) with the provided hook to bring the robot to the surface, then lift it out by the handle.

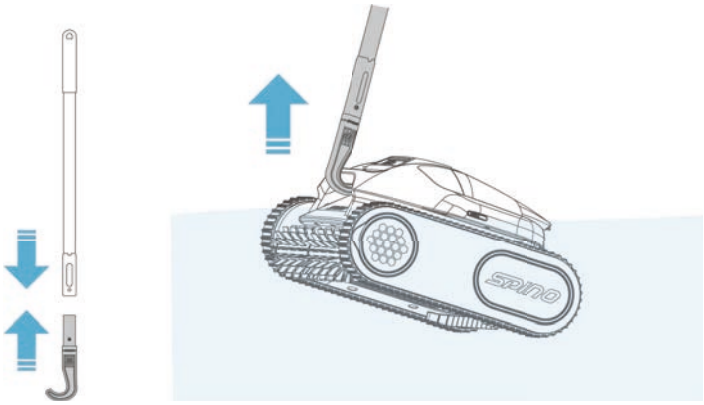

3.3.2 Clean After Use

1. Open the filter basket cover.

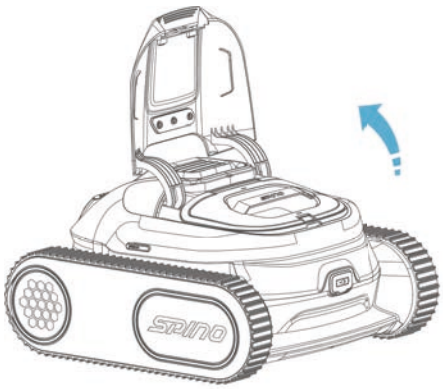

2. Take out the filter basket.

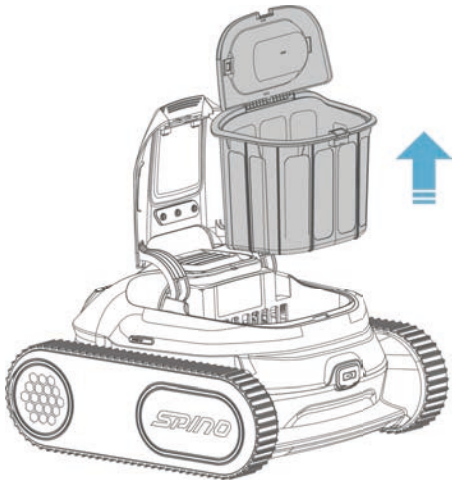

3. Empty and rinse the filter basket.

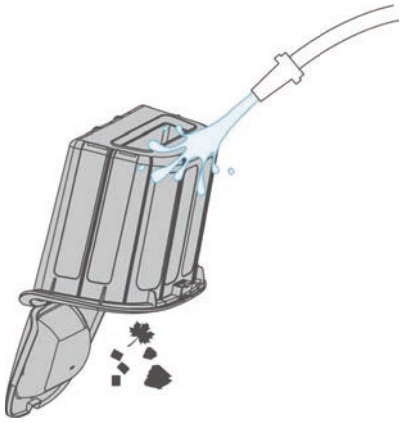

4. Rinse the entire robot.

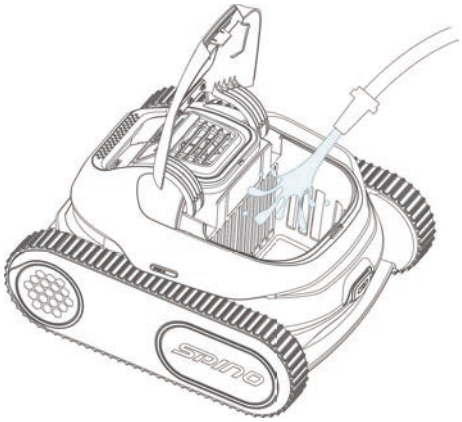

5. Reattach the filter basket.

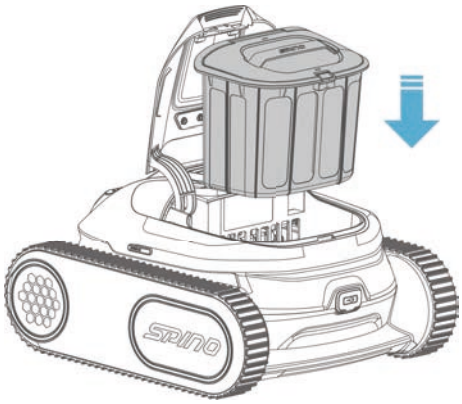

4 Downloading Mammotion App

NOTE

The screens are only for reference. Please refer to the actual ones.

With the Mammotion app, you can manage your robot. The app allows you to:

- Easily manage your robot and perform timely firmware updates to keep it running efficiently.
- Upload diagnostic logs directly to the Mammotion technical support team for quick assistance and troubleshooting.
- Switch between different cleaning mode.

For initial use, you can scan the QR code to get it from the Android or Apple app stores, or search for Mammotion in these stores.

Register your account according to the on-screen instructions. If you already has a Mammotion account, input your email address and password to log it in.

During use, the app may ask you for Bluetooth, Location, and local network access when necessary. For optimal use, it is recommended to allow the above access. For more information, please refer to our Privacy Agreement. Go to Mammotion app > **Me** > **About Mammotion** > **Privacy Agreement**.

If you want to log in with a third-party account, tap or on the login page to continue. Mammotion app now supports logging in with Google and Apple accounts.

4.1 Setting Up Your Robot

1. Press and Hold the Power button to turn on the robot.
2. Tap **Add** to connect your robot to your account.
3. If you already link another Mammotion product, switch to the last page and tap **Add** to link a new one.

NOTE

To link the robot to your mobile device, ensure it is out of the water. Please note that the connection will automatically disconnect once the robot is submerged.

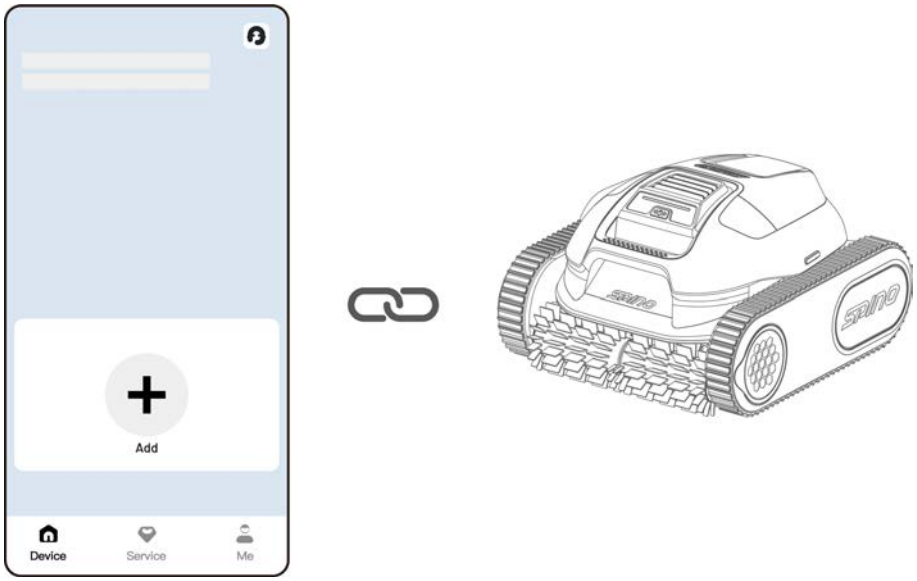

4.2 Upload Logs

➢ **To upload logs**

1. Go to ⚙ > **Upload Logs** to upload the logs.
2. Ensure the robot is connected to a stable network.
3. Follow the on-screen instructions to complete the process.

During the upload, please do not exit the app, perform other operations, turn off the robot, disconnect Bluetooth, or place the robot in water.

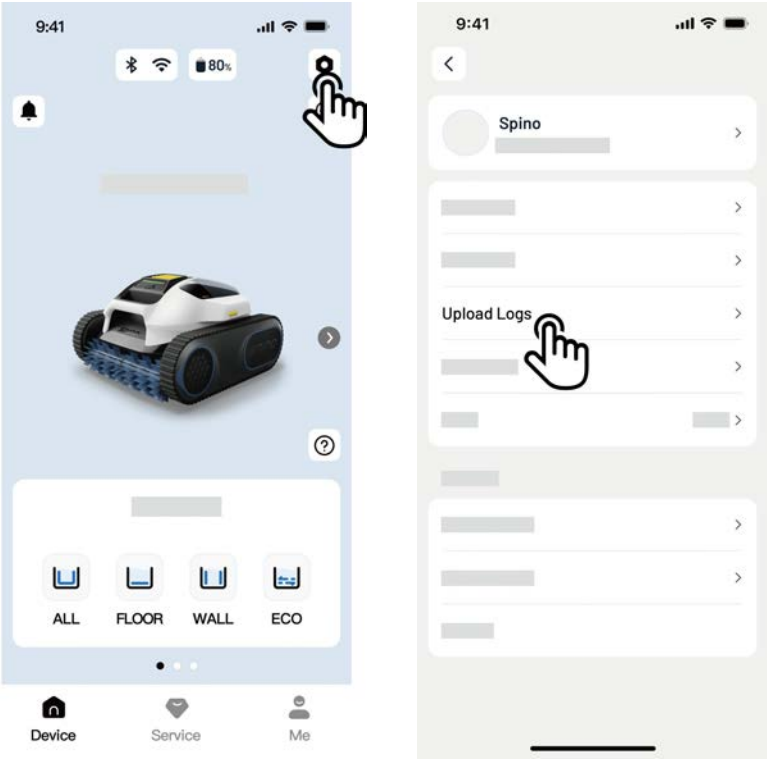

4.3 Update Firmware

For optimal experience, ensure your devices are updated to the latest firmware version.

➢ **To update the firmware**

1. Go to ⬢ > **Device information** > **Robot version** to update the firmware.
2. Ensure the robot is connected to a stable network.

During the update, please do not exit the app, perform other operations, turn off the robot, disconnect the Bluetooth, or place the robot into water.

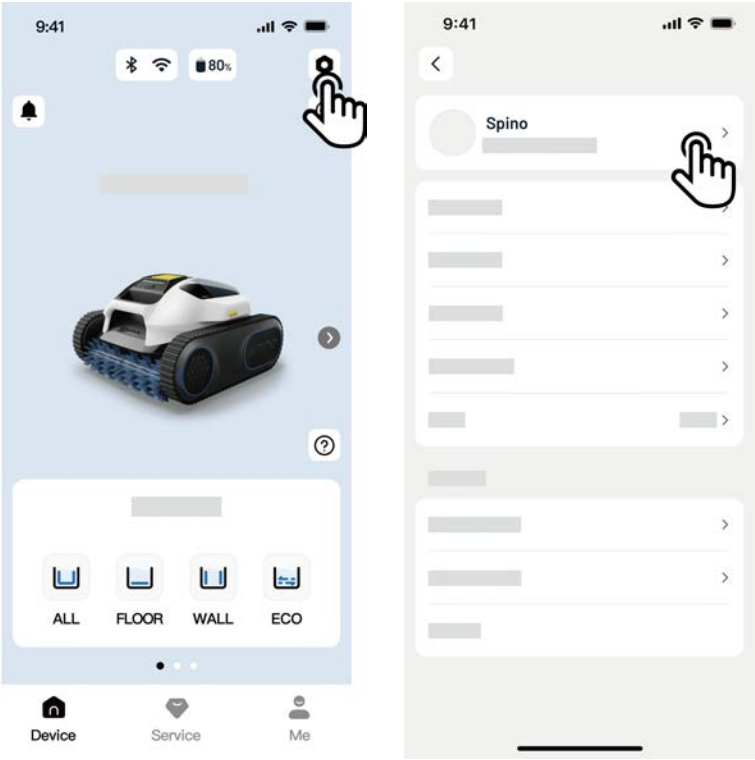

4.4 Beta Features

The Beta Features section provides early access to experimental functions and smart technologies under development.

- **Turbo Cleaning**

  It boosts spray and suction performance for a deeper clean, but also increases battery usage. This mode will automatically turn off after a restart.

- **Platform Cleaning**

  Activate this feature for enhanced cleaning of platforms and walls in your pool. The robot will automatically climb these surfaces upon encounter. This feature deactivates when the robot turns off, so you'll need to manually reactivate it each time.

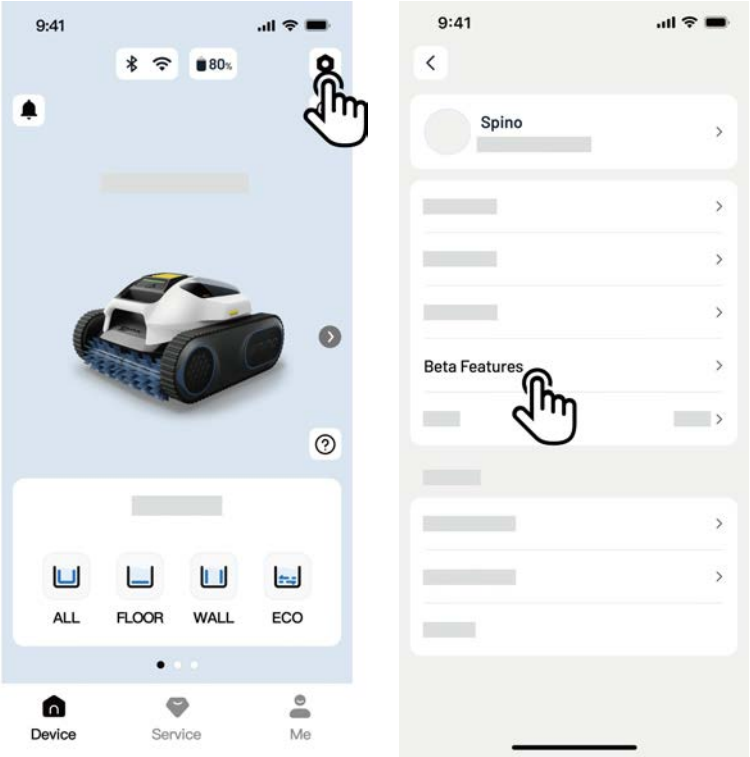

5 Maintenance

WARNING

Ensure the robot is fully turned off before performing any inspection or maintenance.

5.1 Clean the Robot

- After each use, inspect and clear any debris, such as tangled hair or trapped sand, from the water outlet, caterpillar treads, and roller brush.
- Rinse the robot and filter basket thoroughly after each use.

5.2 Routine Inspection

- **Check the Water Outlet**

  Inspect the water outlet for any foreign objects. Ensure the robot is turned off before the inspection. Remove any obstructions if found.

- **Check the Charging Port**

  Examine the charging port for any signs of damage. If damage is detected, please contact our after-sales support for assistance.

- **Check the Caterpillar Tread**

  Ensure the caterpillar treads are securely in place. If any caterpillar tread is loose, reattach it to its proper position on the track.

- **Check the Roller Brush**

  Check for any wear on the roller brush. If wear is found, replace it with a new roller brush. You can purchase replacement parts from Mammotion official stores and follow the provided instructions for installation.

5.3 Storage

1. Please thoroughly clean the robot and filter basket, then allow them to dry completely.
2. Apply an anti-rust agent to the metal contacts of the charging port and charger connector.
3. Store the robot in a well-ventilated, dry indoor space, away from direct sunlight, rain, and frost.
4. Ensure the robot is turned off during storage.
5. Make sure the robot is fully drained of water and completely dry before storing.
6. Fully charge the robot before storing it, and recharge it every 3 months to maintain battery health.

5.4 Replaceable Accessories

To ensure your robot operates smoothly and effectively, regularly inspect the following components and replace them if necessary:

- Roller Brush

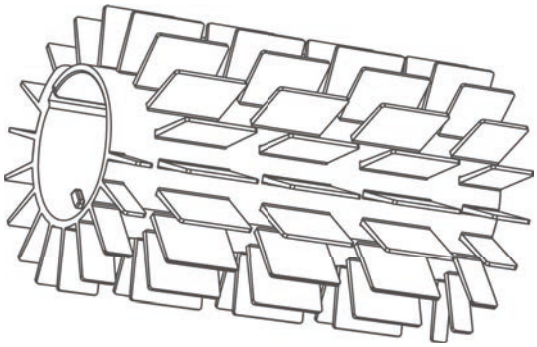

- Filter Basket

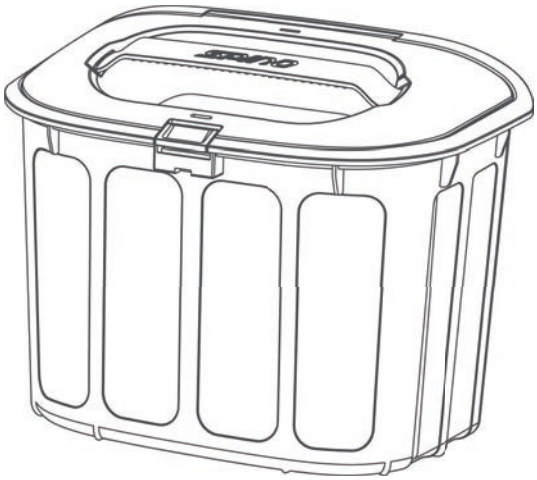

- Caterpillar Tread

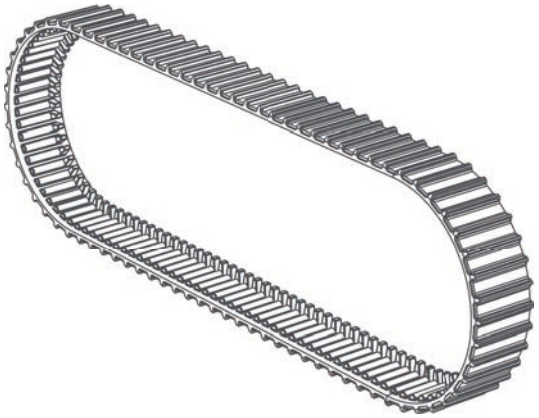

- Side Cover

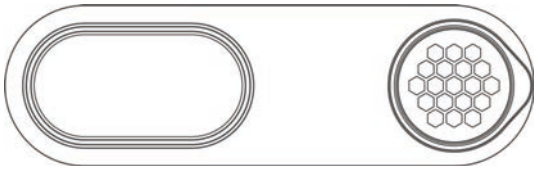

6 Disposal

Dispose of this product in compliance with local electronic waste (WEEE) regulations. Do not dispose of it with regular household waste. Instead, bring it to an authorized recycling center or collection point to ensure safe handling and environmentally responsible disposal of electronic components.

7 Product Specifications

Model Name	SPINO E1
Working Voltage	Robot: 21.6 V
	Battery Charger: 100-240 V~, 50/60 Hz
Battery Charger Input	100-240 V~, 50/60 Hz, 2.0 A Max.
Battery Charger Output	27 V ⎓ 3 A, 81 W
Battery Charger Model	TS-A081-2703003
Battery Capacity	21.6 Vdc, 6 Ah, 129.6 Wh
Charging Temperature	10 °C-40 °C (50 °F-104 °F)
Charging Time	3 hours
Working Time	Up to 210 min
Working Water Depth	Max. 3 m (9.8 ft.)
Cleaning Path	Smart Arc
Wall Climbing	45°-110°
Filter Basket	2.8 L
Filter Layer	180 μm Fine Filter Basket
App Control	Mammotion App
Automatic Surface Parking	YES
Quick Water Release	YES

OTA Update	YES					
Dimensions (L*W*H)	444 x 412 x 243 mm (17.5 x 16.2 x 9.6 in)					
Robot Net Weight	9.3 kg (21 lbs.)					
Waterproof	IPX8 & Battery Double Layer Waterproof					
Applicable Pool Conditions						
Pool Surfaces	Concrete	Fiberglass	Vinyl	Tile	Marble	Pebble Tec
PH	6.5-8.3					
Temperature	5 °C-40 °C (41 °F-104 °F)					
NaCl	Max. 5000 ppm					
Chlorine	Max. 3 ppm					
Operating Frequency						
Bluetooth	2400-2483.5 MHz					
Wi-Fi	2400-2483.5 MHz					
Maximum Transmitter Power						
Bluetooth	<20 dBm					
Wi-Fi	<20 dBm					

8 Warranty

Shenzhen Mammotion Innovation Co., Ltd warrants that this product will be free from material and workmanship defects under normal use in accordance with the product materials published by Mammotion during the warranty period. The published product materials include but not limited to user manual, quick start guide, maintenance, specifications, disclaimer, in-app notifications, etc. The warranty period varies among different products and parts. Check the table below:

Component	**Warranty**				
	EU	**US**	**UK**	**AU**	**CA**
Motor Module	2 years	2 years	2 years	2 years	2 years
Top Cover	2 years	2 years	2 years	2 years	2 years
Chassis	2 years	2 years	2 years	2 years	2 years
Caterpillar Tread Drive System	2 years	2 years	2 years	2 years	2 years
Roller Shaft	2 years	2 years	2 years	2 years	2 years
Wearing Parts					
Left/Right Side Cover	3 months	3 months	3 months	3 months	3 months
Hook	3 months	3 months	3 months	3 months	3 months
Filter Basket	3 months	3 months	3 months	3 months	3 months
Caterpillar Tread	3 months	3 months	3 months	3 months	3 months
Roller Brush	3 months	3 months	3 months	3 months	3 months

Charger	3 months	3 months	3 months	3 months	3 months

If the product does not function as warranted during the warranty period, please contact Mammotion customer service for instructions.

- For products purchased from a local dealer, kindly reach out to the dealer first.
- Users must present a valid proof of purchase, receipt, or order number (for Mammotion Direct Sales). The serial number of the product is crucial for initiating warranty service.
- Mammotion will make every effort to address concerns through phone calls, email, or online chat.
- In some cases, Mammotion may advise you to download or install specific software updates.
- If issues persist, you may need to send the product to Mammotion for further assessment or to a local Mammotion-appointed service center.
- The warranty period for the product commences from the original date of purchase indicated on the sales receipt or invoice.
- For pre-ordered products, the warranty period begins from the shipping date from the local warehouse.
- Mammotion will need users to arrange the shipment by themselves if users would like to send the products to local service center or Mammotion factory for further diagnosis. Mammotion will repair or replace and send back to users at no cost if the problem falls under the warranty. If not, Mammotion or designated service center may charge a fee accordingly.

Here puts some examples of faults that warranty will not cover:

- Failure to follow the instructions outlined in the user manual.
- If the product arrives damaged during shipment and is not rejected upon delivery, or if no official documentation confirming the damages is provided by the shipping company. Inability to provide evidence of damage occurring during transit.
- Product malfunction due to accidents, misuse, abuse, natural disasters like floods, fires,

earthquakes, exposure to food or liquid spills, incorrect electrical charging, or other external factors.

- Damage resulting from using the product in ways not permitted or intended as specified by Mammotion.
- Modification of the product or its components that significantly alters functionality or capabilities without obtaining written permission from Mammotion.
- Loss, damage, or unauthorized access to your data.
- Signs of tampering or alteration on product labels, serial numbers, etc.
- Failure to provide a valid proof of purchase from Mammotion, such as a receipt or invoice, or if there are suspicions of forgery or tampering with the documentation.

9 Compliance

FCC Compliance Statements

This device complies with Part 15 of the FCC Rules. Operation is subject to the following two conditions: (1) this device may not cause harmful interference, and (2) this device must accept any interference received, including interference that may cause undesired operation.

Caution: Changes or modifications not expressly approved by the party responsible for compliance could void the user's authority to operate the equipment.

Note: This equipment has been tested and found to comply with the limits for a Class B digital device, pursuant to Part 15 of the FCC Rules. These limits are designed to provide reasonable protection against harmful interference in a residential installation. This equipment generates, uses and can radiate radio frequency energy and, if not installed and used in accordance with the instructions, may cause harmful interference to radio communications. However, there is no guarantee that interference will not occur in a particular installation.

If this equipment does cause harmful interference to radio or television reception, which can be determined by turning the equipment off and on, the user is encouraged to try to correct the interference by one or more of the following measures:

-- Reorient or relocate the receiving antenna.

-- Increase the separation between the equipment and receiver.

-- Connect the equipment into an outlet on a circuit different from that to which the receiver is connected.

-- Consult the dealer or an experienced radio/TV technician for help.

ISED Compliance Statements

This device contains licence-exempt transmitter(s)/receiver(s) that comply with Innovation, Science and Economic Development Canada's licence-exempt RSS(s). Operation is subject to the following two conditions:

(1) This device may not cause interference.

(2) This device must accept any interference, including interference that may cause undesired operation of the device.

This equipment complies with IC RSS-102 radiation exposure limits set forth for an uncontrolled environment.

L'émetteur/récepteur exempt de licence contenu dans le présent appareil est conforme aux CNR d'Innovation,

Sciences et Développement économique Canada applicables aux appareils radio exempts de licence.

L'exploitation est autorisée aux deux conditions suivantes:

(1) L'appareil ne doit pas produire de brouillage;

(2) L'appareil doit accepter tout brouillage radioélectrique subi, même si le brouillage est susceptible d'en compromettre le fonctionnement.

Cet équipement est conforme aux limites d'exposition aux radiations IC CNR-102 établies pour un environnement non contrôlé.

RF Exposure Compliance

This equipment complies with FCC/IC RSS-102 radiation exposure limits set forth for an uncontrolled environment. This transmitter must not be co-located or operating in conjunction with any other antenna or transmitter. This equipment should be installed and operated with minimum distance 20 cm between the radiator and your body.

Cet équipement est conforme aux limites d'exposition aux radiations IC CNR-102 établies pour un environnement non contrôlé.

Cet émetteur ne doit pas être colocalisé ou fonctionner en conjonction avec une autre antenne ou un autre émetteur. Cet équipement doit être installé et utilisé avec une distance minimale de 20 cm entre le radiateur et votre corps.

10 Simplified EU Declaration of Conformity

Hereby, Shenzhen Mammotion Innovation Co., Limited declares that the radio equipment type [Model: E1] is in compliance with Directive 2014/53/EU.

The full text of the EU declaration of conformity is available at the following internet address: https://mammotion.com/pages/eu-declaration-of-conformity.

11 Contact Us

If you experience any issues with your Mammotion robot's operation, maintenance, safety, or encounter any faults, please contact us.

Manufacturer: Shenzhen Mammotion Innovation Co., Limited

Address: 9th Floor, Building A3, Nanshan Zhiyuan, No. 1001 Xueyuan Avenue, Changyuan Community, Taoyuan Street, Nanshan District, Shenzhen

Asia Pacific

Importer: Mammotion Technology Co., Limited

Address: Shop 28 on 1st Floor, Lee Bo Building, No.3 Tsing Ho Square, Tuen Mun, Hong Kong

Email: support-apac@mammotion.com

Hotline:

Australia: (+61) 1800-991-136

Mon-Fri 9:00-17:00 (AEST)

Europe

Importer/Authorized Representative: Mammotion Technik GmbH

Address: Monschauer Str. 1 11.OG, 40549 Düsseldorf, Germany

Email: support-eu@mammotion.com

Hotline:

Germany: (+49) 800-000-1148

France: (+33) 800-992-268

Mon-Fri 9:00-17:00 (CEST)

United Kingdom

Authorized Representative: WSJ Product Ltd.

Address: Unit 1 Alsopo Arcade, Brownlow Hill, Liverpool, L3 5TX, UK

Email: info@wsj-product.com

North America

Importer: Mammotion Technology LLC

Address: 13640 REDWOOD CT CHINO, CA 91710

Email: support-na@mammotion.com

Hotline:

USA/Canada: (+1) 877-778-1164

Mon-Fri 10:00-21:00 (EST)

SHENZHEN MAMMOTION INNOVATION CO., LTD

www.mammotion.com

Copyright © 2026, MAMMOTION All Rights Reserved.